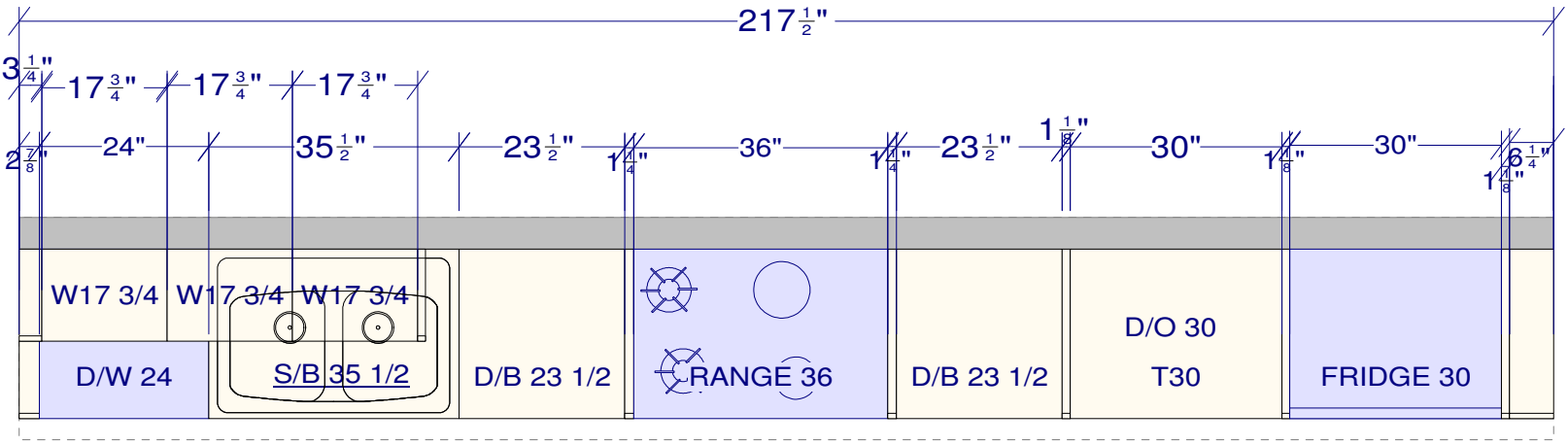

OVERALL 93 FULL HEIGHT 91 UPPER HEIGHT 36 UPPER DEPTH 13

All dimensions _size designations given are subject to verification on job site and adjustment to fit job conditions.	2020	This is an original design and must not be released or copied unless applicable fee has been paid or job order placed.	Designed: 12/13/2018 Printed: 12/20/2018

A1510-K17	All	Drawing #: 1	No Scale.